PARTS LIST

MS0735W

CONTENTS

1. MAIN BODY ..... 1 ~ 2
2. CHEMICAL TANK ..... 3 ~ 4
3. POWER SPRAYER ..... 5 ~ 8
4. REDUCTION GEAR ..... 9 ~ 10
5. ENGINE ..... 11 ~ 14
6. CARBURETOR, RECOIL STARTER ..... 15 ~ 18
7. ACCESSORIES ..... 19 ~ 20

2012. 03.

MARUYAMA

P/N 523365

1. MS0735W
MAIN BODY

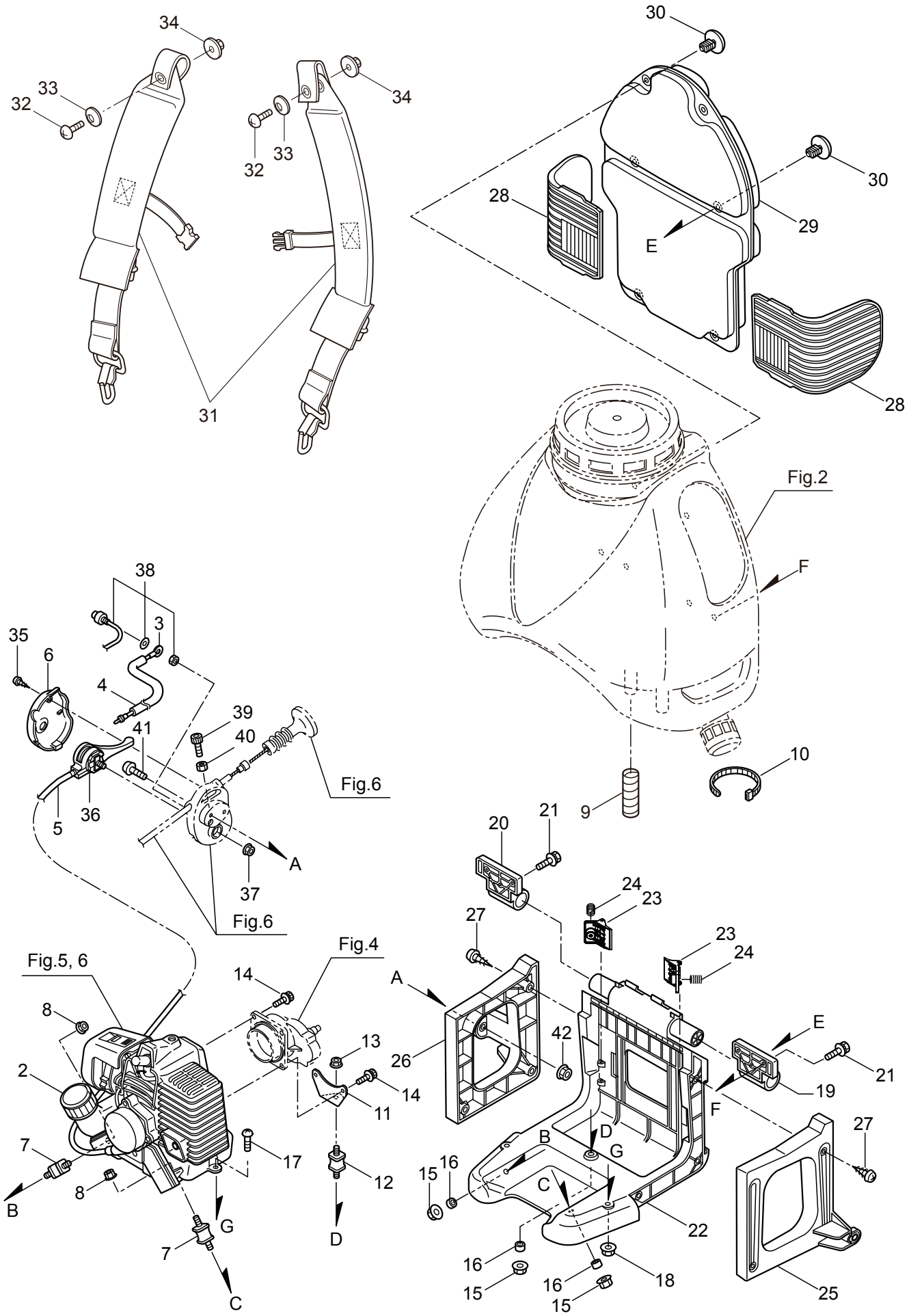

Ref. No.	Part No.	Part Name	Q'ty	Remarks
1-1	354981	MS0735W	1	
1-2	858429	Engine	1	BE230P/57
1-3	114896	Ground Wire	1	
1-4	114901	Vinyl Hose	1	8x9x220L
1-5	282365	Throttle Cable	1	OUT373/IN68
1-6	125045	Throttle Cover	1	
1-7	126722	Buffer	2	22-M6x11x11
1-8	126756	Nut	2	M6
1-9	127847	Coil Tube	1	15x18x60L
1-10	104343	Band	1	
1-11	125803	Stay	1	
1-12	126722	Buffer	1	22-M6x11x11
1-13	126756	Nut	1	M6
1-14	126178	Bolt	4	M5x15
1-15	125277	Nut	3	
1-16	125053	Collar	3	
1-17	127221	Screw	2	M6x16
1-18	126756	Nut	2	M6
1-19	130137	Bracket	1	R
1-20	130138	Bracket	1	L
1-21	127233	Bolt	4	M6x16
1-22	125701	Base	1	
1-23	130181	Stopper	2	
1-24	129268	Spring	2	
1-25	125703	Stay (R)	1	
1-26	125705	Stay (L)	1	
1-27	129618	Tapping Screw	6	M5x25
1-28	125707	Cushion Pad	2	
1-29	125713	Cushion Pad	1	
1-30	125068	Fastener	6	
1-31	127019	Knapsack Band	1	
1-32	127221	Screw	2	M6x16
1-33	127224	Washer	2	6x23xt1.6
1-34	127237	Nut	2	M6
1-35	082684	Screw	1	M3x16
1-36	115148	Throttle Lever	1	
1-37	127226	Nut	1	M5
1-38	114895	Stop Button	1	
1-39	087785	Cap Screw	1	M5x0.8x20
1-40	126081	Nut	1	M5
1-41	092038	Screw	2	M6x30
1-42	126756	Nut	2	M6

2. MS0735W
CHEMICAL TANK

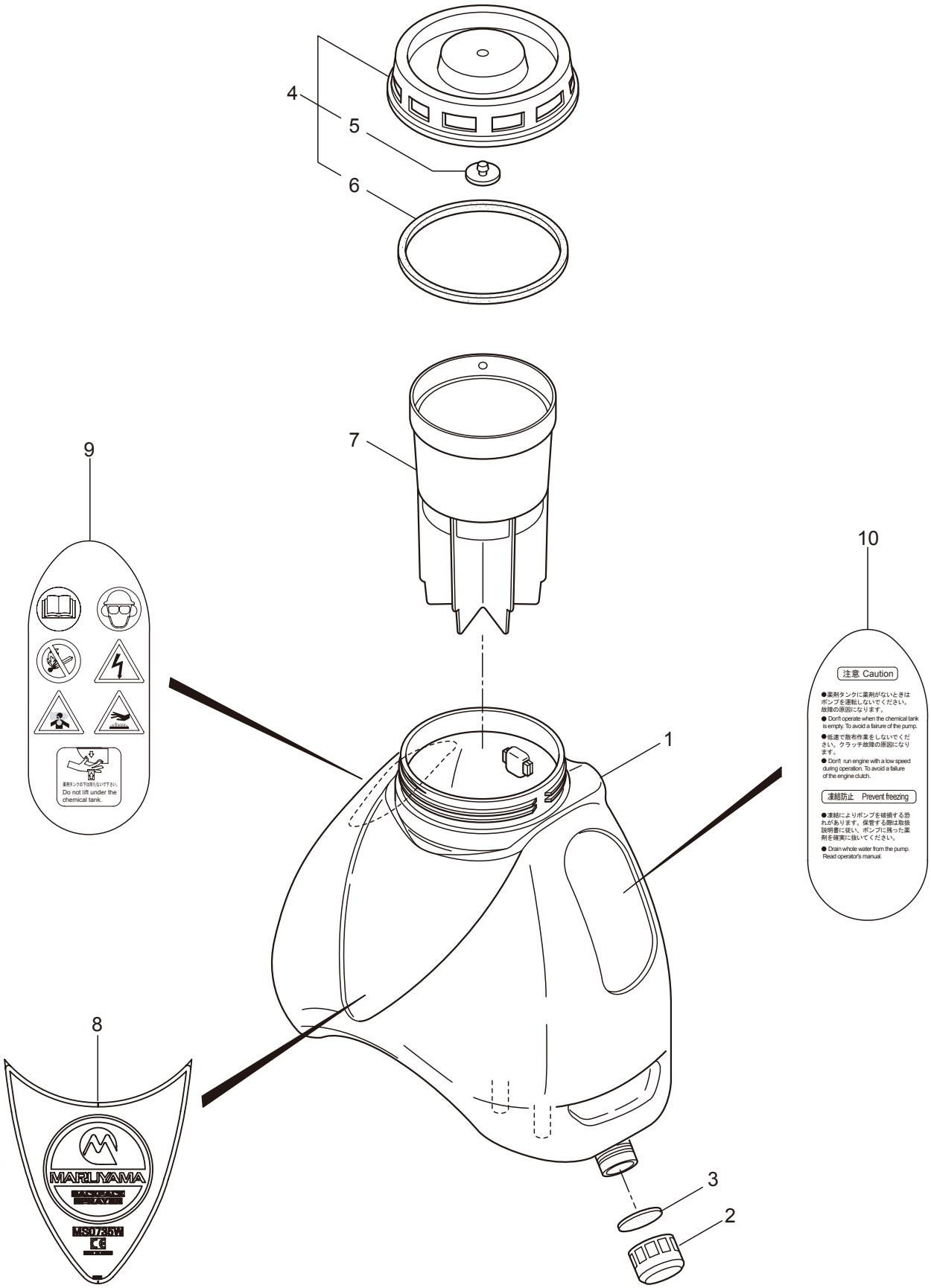

Ref. No.	Part No.	Part Name	Q'ty	Remarks
2-1	125692	Chemical Tank	1	25L
2-2	118147	Cap	1	
2-3	029299	Packing	1	36xt3.0
2-4	121853	Cap, Chemical Tank	1	Incl.5,6
2-5	126668	Valve	1	
2-6	022362	Packing	1	
2-7	131154	Strainer	1	
2-8	127846	Label	1	MS0735W
2-9	126285	Label	1	
2-10	126286	Label	1	

3. MS0735W
POWER SPRAYER

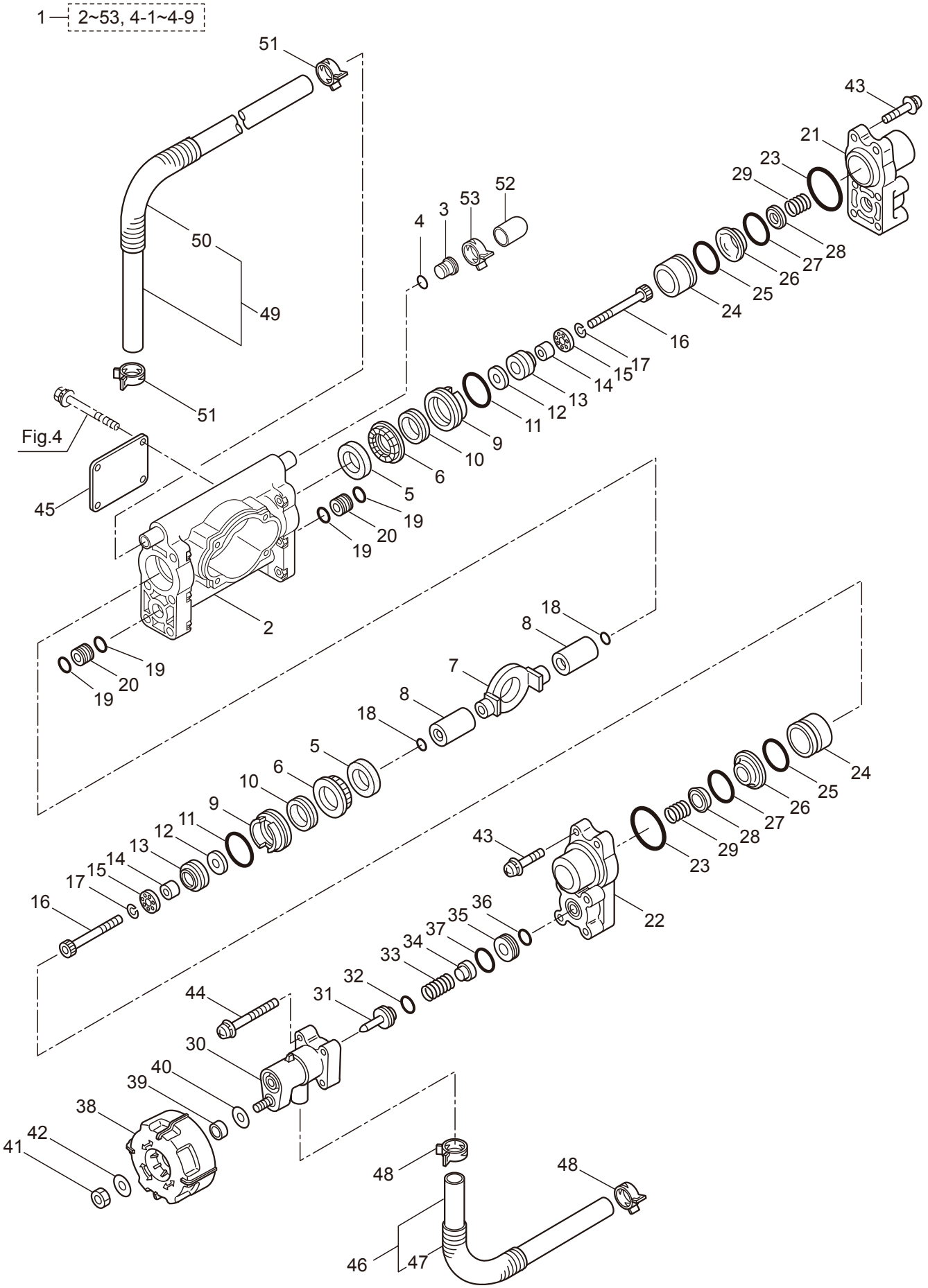

Ref. No.	Part No.	Part Name	Q'ty	Remarks
3-1	126278	Pump Ass'y	1	Incl.2~53,4-1~4-9
3-2	125673	Crankcase Ass'y	1	
3-3	129041	Plug	1	
3-4	021549	O-Ring	1	P5
3-5	102683	Oil Seal	2	G16244
3-6	106190	Collar	2	
3-7	121179	Connecting Rod	1	
3-8	125680	Sleeve	2	16x33
3-9	102358	Seal Retainer	2	
3-10	112252	Packing	2	
3-11	013977	O-Ring	2	S26
3-12	043426	Suction Valve Seat	2	5x17xt2.8
3-13	100441	Piston Packing	2	20.5
3-14	023357	Suction Valve Collar	2	5x8x10L
3-15	022023	Suction Valve Stopper	2	5x16xt3
3-16	125681	Bolt	2	M5x50x22
3-17	015848	Spring Washer	2	M5
3-18	021549	O-Ring	2	P5
3-19	014175	O-Ring	4	P9
3-20	100554	Spacer Pipe	2	6x12x10
3-21	103128	Cylinder Head (A)	1	
3-22	102634	Cylinder Head (B)	1	
3-23	013983	O-Ring	2	S31.5
3-24	125682	Cylinder Pipe	2	20x26x22
3-25	023172	O-Ring	2	P22
3-26	125683	Valve Seat	2	
3-27	103575	O-Ring	2	23x1.5
3-28	043723	Discharge Valve	2	
3-29	043360	Discharge Valve Spring	2	
3-30	103132	Spring Case	1	
3-31	121618	Spring Retainer	1	
3-32	011682	O-Ring	1	P10
3-33	121620	Compression Coil Spring	1	
3-34	121619	Discharge Valve	1	
3-35	103746	Valve Seat	1	
3-36	011343	O-Ring	1	P10A
3-37	011346	O-Ring	1	P14
3-38	107198	Handle	1	
3-39	127225	Collar	1	8x10x5.3
3-40	127217	Washer	5	8.5x14xT0.5
3-41	126521	Nut	1	M8
3-42	127216	Washer	1	M8
3-43	121956	Screw	8	M5x32
3-44	816036	Screw	4	M5x60
3-45	125801	Plate	1	

3. MS0735W
POWER SPRAYER

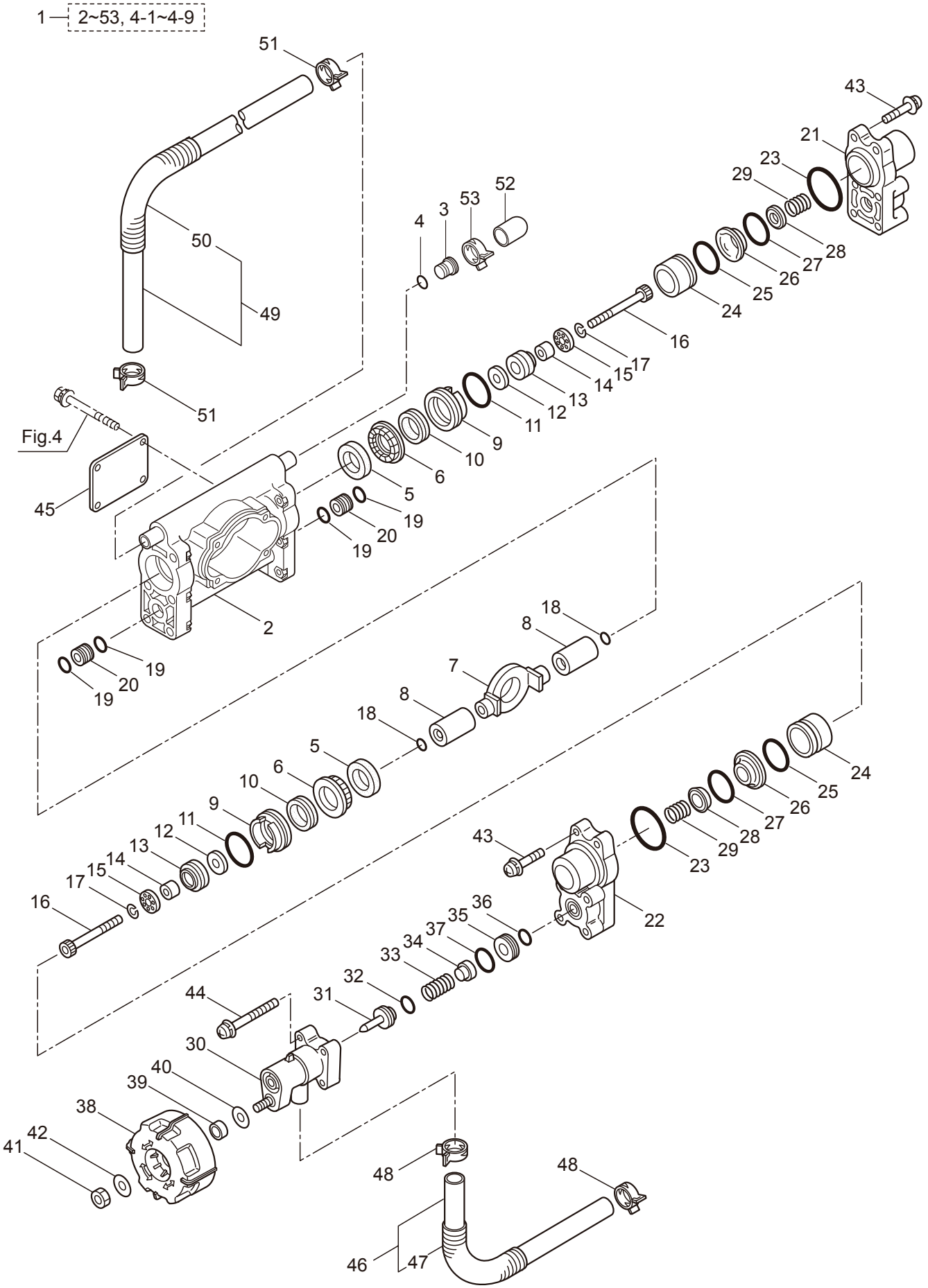

Ref. No.	Part No.	Part Name	Q'ty	Remarks
3-46	122175	Hose Ass'y	1	Incl.47
3-47	122177	Tube	1	
3-48	103033	Band	2	150-05-00
3-49	126066	Hose Ass'y	1	Incl.50
3-50	127080	Tube	1	
3-51	103033	Band	2	150-05-00
3-52	129042	Cap	1	
3-53	043972	Hose Band	1	

4. MS0735W
REDUCTION GEAR

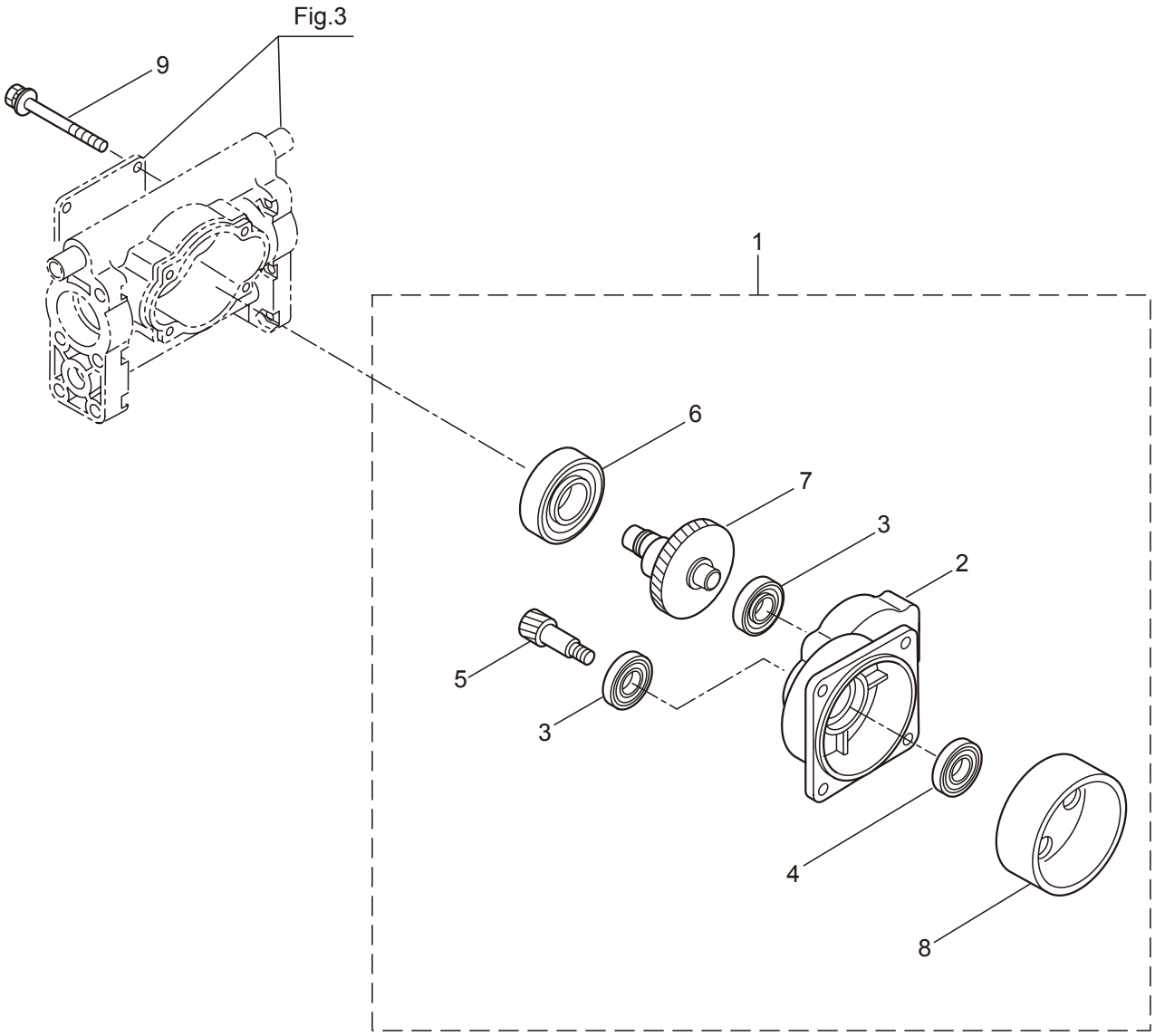

Ref. No.	Part No.	Part Name	Q'ty	Remarks
4-1	126279	Reduction Gear Ass'y	1	Incl.2-8
4-2	125685	Gear Case	1	
4-3	102680	Bearing	2	#6000ZZ
4-4	112184	Bearing	1	#6000DDU
4-5	125686	Pinion Gear	1	
4-6	103144	Bearing	1	#6004ZZ
4-7	126280	Crankshaft	1	
4-8	127367	Clutch Drum	1	
4-9	126059	Bolt	4	M6x60

5. MS0735W
ENGINE

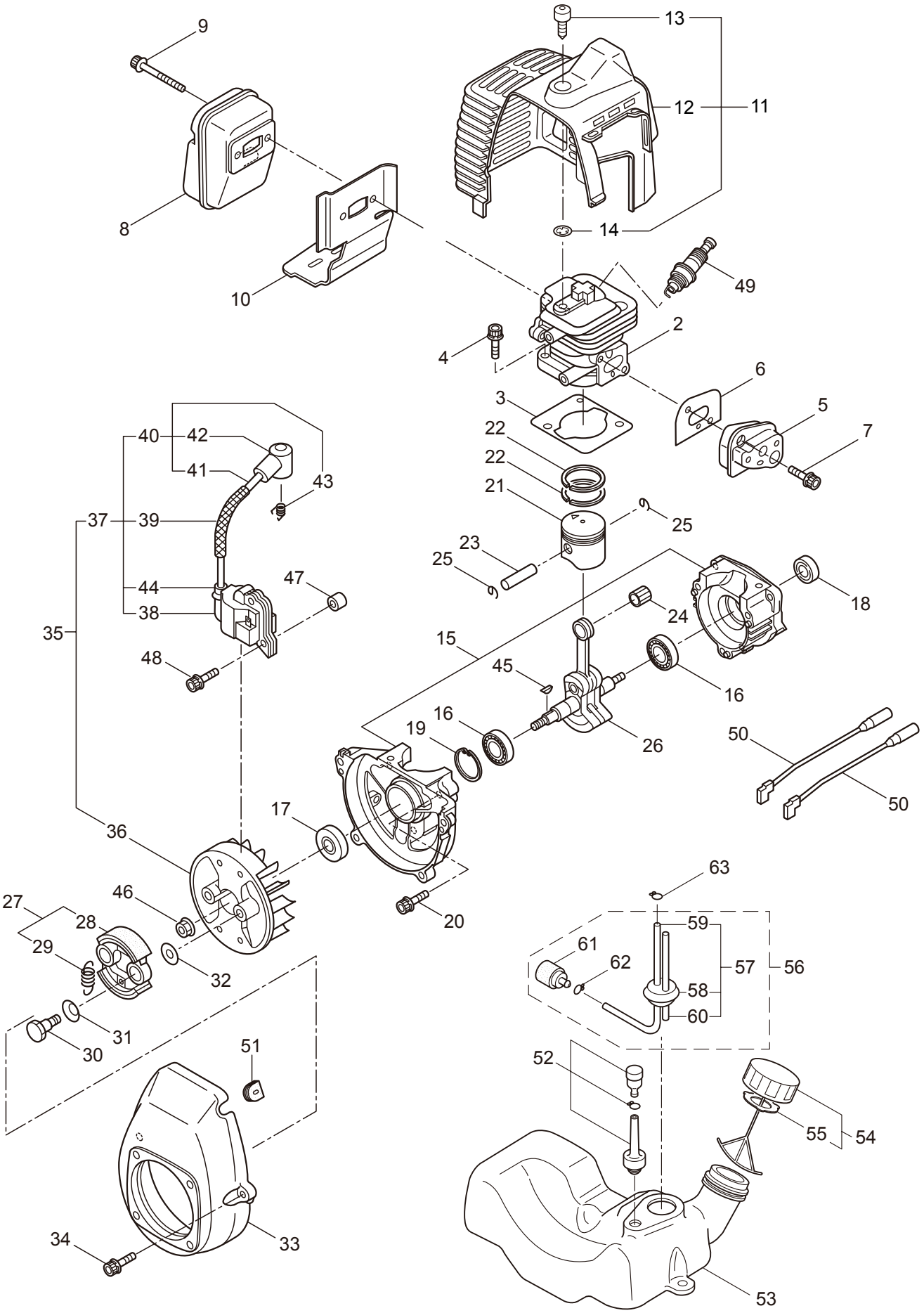

Ref. No.	Part No.	Part Name	Q'ty	Remarks
5-1	858429	Engine	1	BE230P/57
5-2	266249	Cylinder	1	New gasket required
5-3	283420	Gasket	1	
5-4	267290	Cap Screw	2	M5x20
5-5	265802	Insulator	1	New gasket required
5-6	267049	Gasket	1	
5-7	265924	Cap Screw	2	M5x25
5-8	282835	Muffler Comp.	1	
5-9	266264	Cap Screw	2	M5x50
5-10	281340	Gasket	1	
5-11	286462	Top Cover Ass'y	1	Incl.12-14
5-12	286463	Top Cover	1	
5-13	286349	Knob	1	
5-14	286270	Washer	1	M5
5-15	267063	Crankcase	1	
5-16	280488	Bearing	2	PPL 6001
5-17	261492	Oil Seal	1	ISCD12287
5-18	261386	Oil Seal	1	ISCD12227
5-19	055185	Snap Ring	1	#28
5-20	261612	Cap Screw	3	M5x30
5-21	266467	Piston	1	
5-22	264891	Piston Ring	2	(2)required
5-23	261036	Piston Pin	1	
5-24	263957	Bearing, Needle	1	KTV81112EG01 B2
5-25	261576	Clip,Piston	2	
5-26	267193	Crankshaft/Conn.Rod Ass'y	1	
5-27	264887	Clutch Ass'y	1	Incl.28,29
5-28	264888	Clutch Shoe	2	(2)required
5-29	264889	Spring,Clutch	1	
5-30	264505	Bolt	2	
5-31	261777	Wave Washer	2	
5-32	261189	Washer	2	6x16.5xt1.2
5-33	286454	Fan Cover	1	
5-34	261250	Cap Screw	4	M5x20
5-35	269516	Magneto Ass'y	1	Incl.36-44
5-36	261356	Rotor/Fan	1	
5-37	269512	Ignition Coil Ass'y	1	Incl.38-44
5-38	269513	Coil	1	
5-39	269418	Insulator	1	
5-40	267403	Spark Plug Wire Ass'y	1	Incl.41-43
5-41	267404	Spark Plug Wire	1	
5-42	261074	Plug Boot	1	
5-43	261075	Connector	1	
5-44	261072	Cap	1	
5-45	261076	Woodruff Key	1	3x10

5. MS0735W
ENGINE

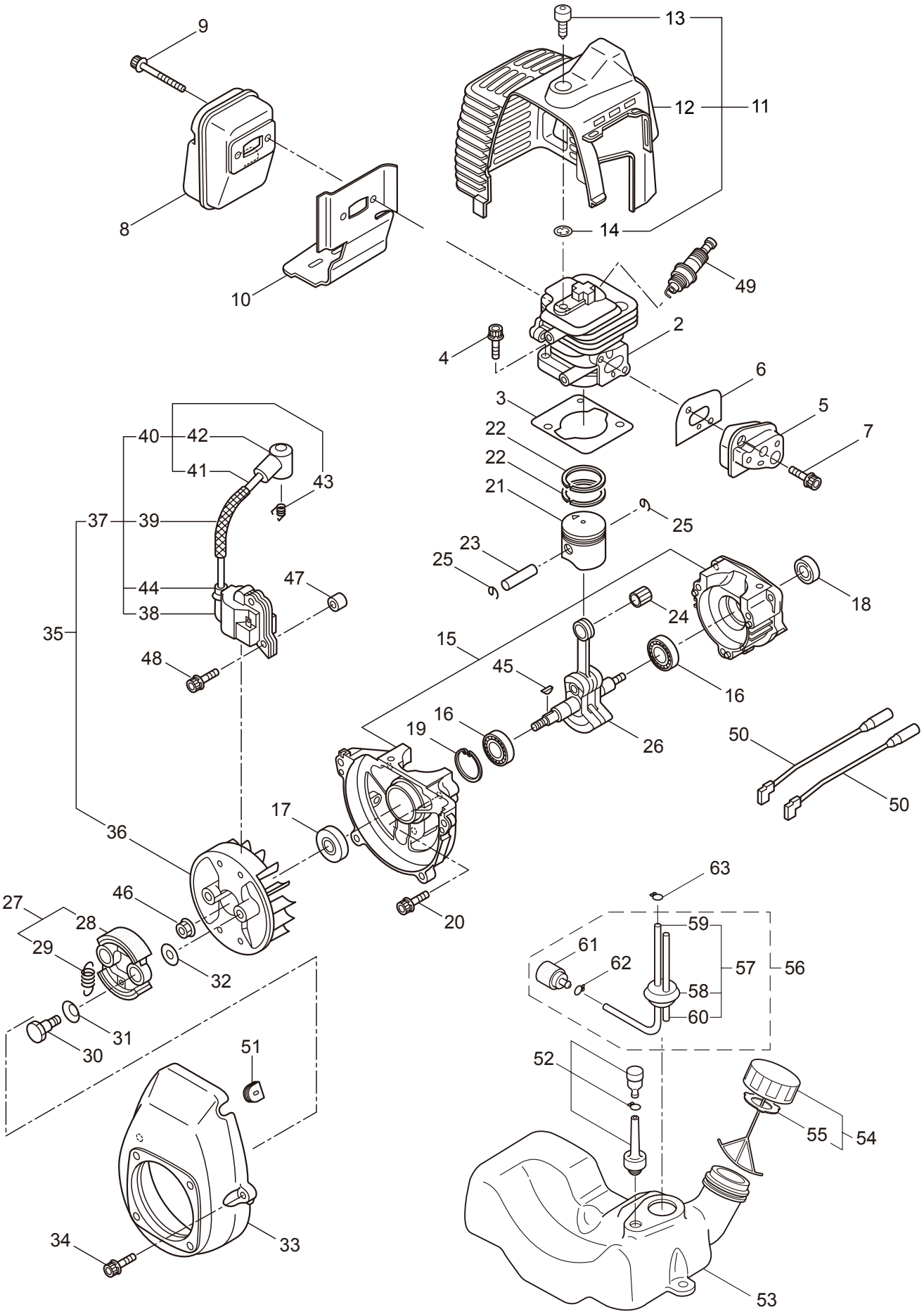

Ref. No.	Part No.	Part Name	Q'ty	Remarks
5-46	261417	Nut,Rotor	1	M8
5-47	280381	Spacer	2	
5-48	261256	Cap Screw	2	M4x25
5-49	262483	Spark Plug	1	NGK BPMR6Y
5-50	267492	Lead	2	130L
5-51	261202	Grommet	1	
5-52	261696	Breather Ass'y	1	
5-53	125697	Fuel Tank	1	
5-54	262726	Fuel Tank Cap Ass'y	1	Incl.55
5-55	261105	Gasket	1	
5-56	282630	Fuel Pipe Pick-up Ass'y	1	Incl.57-62
5-57	282629	Fuel Pipe Ass'y	1	Incl.58-60
5-58	265869	Grommet	1	
5-59	261690	Fuel Pipe	1	160L
5-60	263038	Return Pipe	1	3x6x85L
5-61	264653	Filter Ass'y	1	
5-62	261117	Clip	1	
5-63	261117	Clip	1	

6. MS0735W
CARBURETOR, RECOIL STARTER

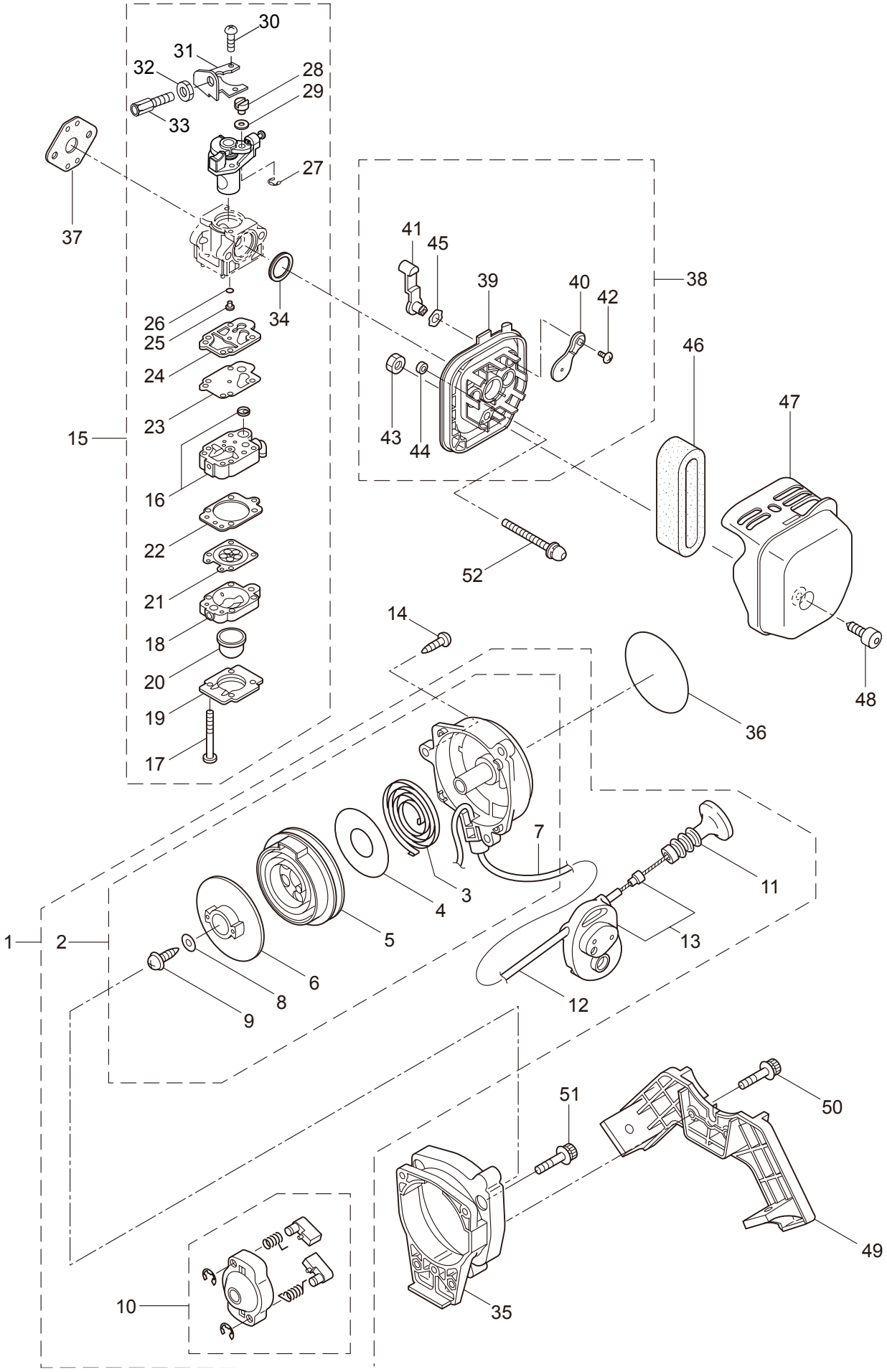

Ref. No.	Part No.	Part Name	Q'ty	Remarks
6-1	282359	Recoil Starter Ass'y	1	Incl.2-13
6-2	281454	Starter Ass'y	1	Incl.3-9
6-3	269495	Recoil Spring	1	
6-4	280114	Thrust Disk	1	
6-5	281455	Spring Case Ass'y	1	
6-6	280110	Pulley	1	
6-7	281621	Starter Rope	1	
6-8	269501	Washer	1	
6-9	269502	Tapping Screw	1	
6-10	269492	Starter Pulley Ass'y	1	
6-11	281335	Grip	1	
6-12	125800	Pipe	1	8x10x390
6-13	125231	Throttle Case Ass'y	1	
6-14	280144	Tapping Screw	3	
6-15	282958	Carburetor Ass'y	1	Incl.16-34
6-16	263739	Pump Body	1	
6-17	262996	Screw	4	
6-18	262991	Purge Body	1	
6-19	262992	Cover Plate	1	
6-20	261874	Primer Bulb	1	
6-21	283905	Diaphragm, Meterring	1	
6-22	262993	Gasket	1	
6-23	262994	Diaphragm,Fuel Pump	1	
6-24	282576	Gasket	1	
6-25	268574	Main Jet	1	
6-26	261871	O-Ring	1	
6-27	261876	E-Ring	1	
6-28	261658	Swivel	1	
6-29	264678	Washer	1	
6-30	261875	Screw	2	
6-31	264677	Bracket	1	
6-32	261878	Nut	1	
6-33	261877	Adapter	1	
6-34	261657	Packing	1	
6-35	280168	Adapter Ass'y	1	
6-36	282960	Label	1	
6-37	261864	Gasket	1	
6-38	284821	Case Ass'y	1	Incl.39-45
6-39	269026	Case Body	1	
6-40	284802	Valve	1	
6-41	284803	Lever	1	
6-42	269032	Screw	1	
6-43	126993	Nut	1	M5
6-44	269051	Sleeve	2	
6-45	284816	Washer	1	6.4x11x0.15

6. MS0735W
CARBURETOR, RECOIL STARTER

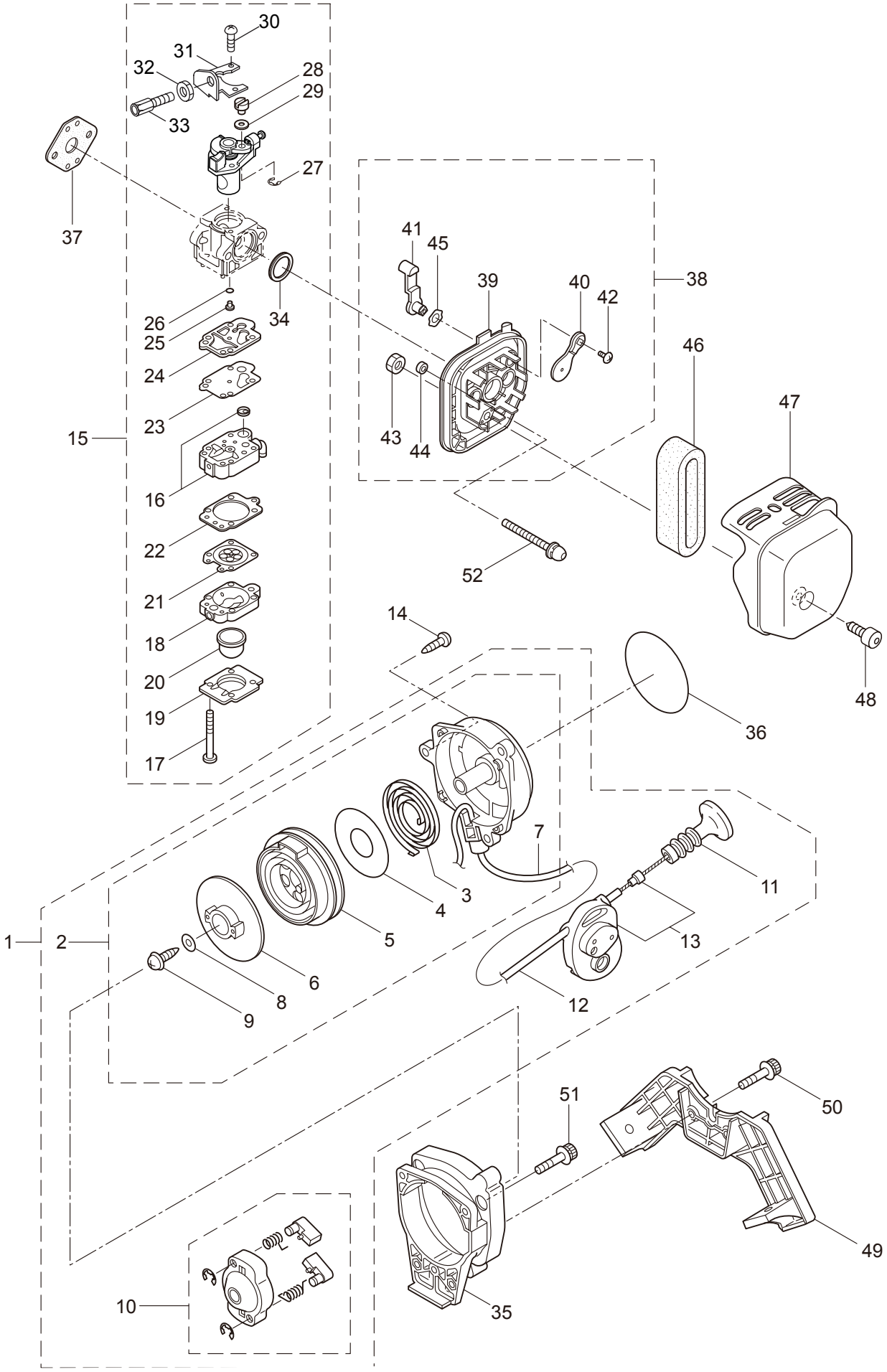

Ref. No.	Part No.	Part Name	Q'ty	Remarks
6-46	269030	Element	1	
6-47	269580	Cleaner Cover	1	
6-48	286349	Knob	1	
6-49	269212	Bracket	1	
6-50	261607	Cap Screw	2	M5x16
6-51	265726	Cap Screw	3	M4x16
6-52	261814	Cap Screw	2	M5x50

7. MS0735W
ACCESSORIES

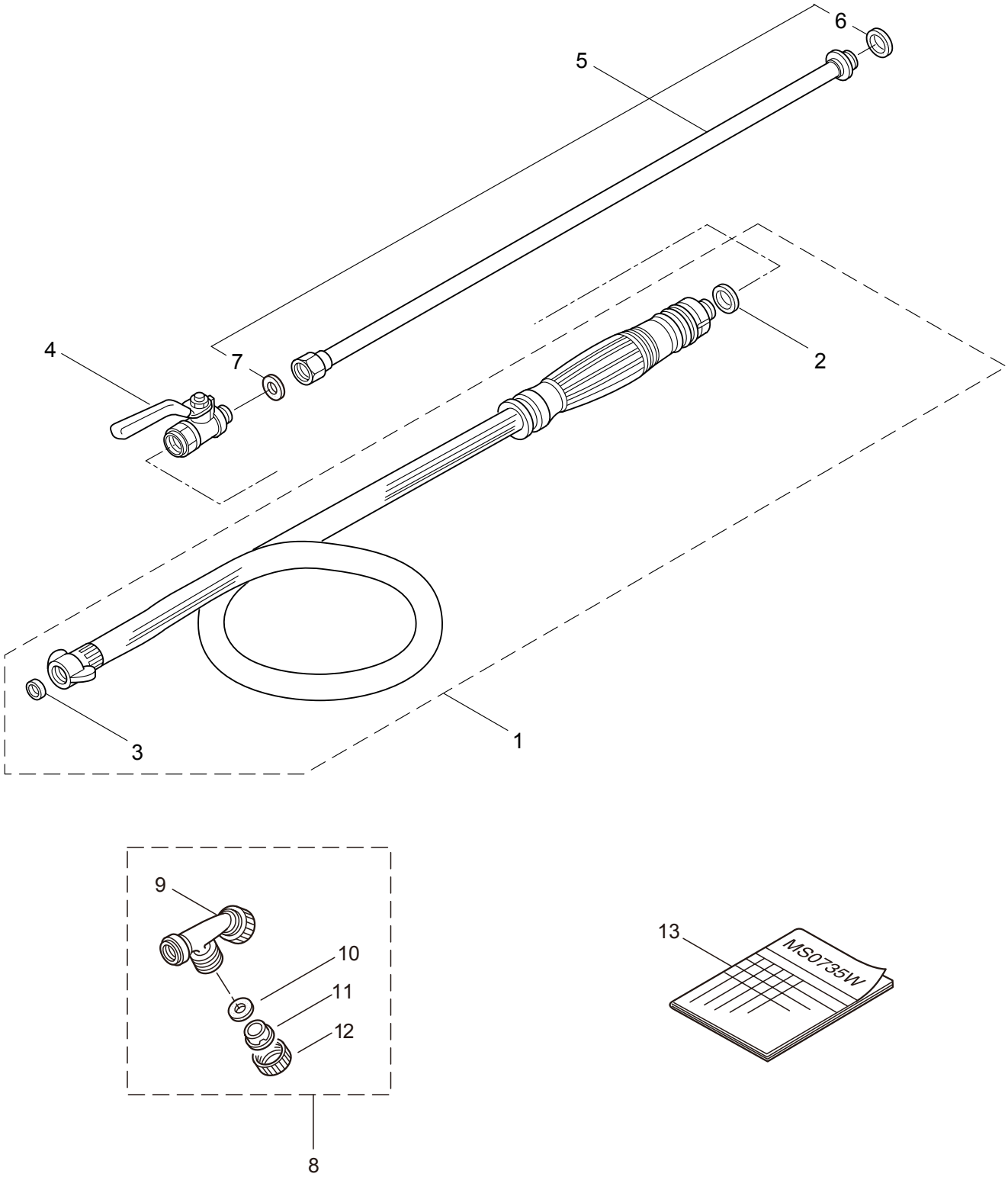

Ref. No.	Part No.	Part Name	Q'ty	Remarks
7-1	118267	Hose Ass'y	1	Incl.2,3 7.5x1300L
7-2	013572	Packing	1	11.5x16xt1.5
7-3	074369	Packing	1	7x11.5xt1.5
7-4	105891	Ball Cock	1	G1/4xG1/4
7-5	124042	Nozzle Pipe	1	Incl.6,7 8x680L G1/4
7-6	112850	Packing	1	11.5x15.5xt1.5
7-7	112851	Packing	1	7x11xt1.5
7-8	117958	Wide Nozzle Ass'y	1	Incl.9-12
7-9	103170	Nozzle Pipe	1	H-606
7-10	103171	Packing	2	H-704
7-11	412894	Nozzle Plate	2	NN-D-5S
7-12	103173	Cap	2	
7-13	127808	Instruction Manual	1	MS0735W